BALDOR
A MEMBER OF THE ABB GROUP

BALDOR • RELIANCE

Product Information Packet

M3355

.17HP,1725RPM,3PH,60HZ,42,3316M,TEFC,F1

Copyright © All product information within this document is subject to Baldor Electric Company copyright © protection, unless otherwise noted.

Part Detail

Revision:	Z	**Status:**	PRD/A	**Change #:**		**Proprietary:**	No
Type:	AC	**Prod. Type:**	3316M	**Elec. Spec:**	33WG0423	**CD Diagram:**	CD0005A05
Enclosure:	TEFC	**Mfg Plant:**		**Mech. Spec:**	33-870	**Layout:**	33LY0870
Frame:	42	**Mounting:**	F1	**Poles:**	04	**Created Date:**	06-25-2007
Base:	RG	**Rotation:**	R	**Insulation:**	B	**Eff. Date:**	09-07-2016
Leads:	9#18					**Replaced By:**	
Literature:		**Elec. Diagram:**					

BALDOR
A MEMBER OF THE ABB GROUP

Nameplate NP1256L

CAT.NO.	M3355						
SPEC.	33-870-423						
HP	.17						
VOLTS	230/460						
AMP	1.2/.6						
RPM	1725						
FRAME	42	HZ	60			PH	3
SER.F.	1.35	CODE	-	DES	-	CLASS	B
NEMA-NOM-EFF	62	PF	51				
RATING	40C AMB-CONT						
CC				USABLE AT 208V	1.4		
DE	6203	ODE	6203				
ENCL	TEFC	SN					
	SFA 1.3/.65						

BALDOR
A MEMBER OF THE ABB GROUP

Parts List

Part Number	Description	Quantity
SA007369	SA 33-870-423	1.000 EA
RA003816	RA 33-870-423	1.000 EA
LC0005	CONN.DIA.,TY M,9-LD,DUAL VOLT,REVERSING	1.000 EA
34CB3002C	CB CAST W/.69 DIA HOLE	1.000 EA
34GS1029A01	GASKET, CONDUIT BOX	1.000 EA
51XB1016A07	10-16 X 7/16 HXWSSLD SERTYB	2.000 EA
11XW1032G06	10-32 X .38, TAPTITE II, HEX WSHR SLTD U	1.000 EA
33EP3100A01SP	EP,33AC ODE GP 6203 TEFC W/DRAIN	1.000 EA
HW5109A05	WASHER, WAVE SPRING FOR 40MM BORE SMALLE	1.000 EA
33EP3100A02	PU ENDPLATE, MACH	1.000 EA
XY1032A02	10-32 HEX NUT DIRECTIONAL SERRATION	2.000 EA
33FN3000SP	EXTERNAL FAN, PLASTIC	1.000 EA
HW1003A08	WASHER, #8 EX TH LK, ZN (F/S)	1.000 EA
33FH4001A01	FAN COVER, STAMPED	1.000 EA
11XT1032A06	10-32 X 3/8 HX WSHR HD SLTD TYPE 23	3.000 EA
34CB4517	CB LID 4 MTG HOLES .22 DIA STAMPED, FOR	1.000 EA
34GS1031A01	GASKET, FLAT CONDUIT BOX LID (LEXIDE)	1.000 EA
51XW0832A07	8-32 X .44, TAPTITE II, HEX WSHR SLTD SE	4.000 EA
MG1000G27	MED CHARCOAL METALLIC GREY 400-0096	0.013 GA
85XU0407S04	4X1/4 U DRIVE PIN STAINLESS	2.000 EA
HA3100A11	THRUBOLT 10-32 X 6.750	2.000 EA
LB1119N	WARNING LABEL	1.000 EA
NP1256L	ALUM UL CSA CC	1.000 EA
34PA1002	PKG GRP, PRINT PK1001A01	1.000 EA

BALDOR
A MEMBER OF THE ABB GROUP

No performance data has been assigned to this product.

BALDOR
A MEMBER OF THE ABB GROUP

33LY0870

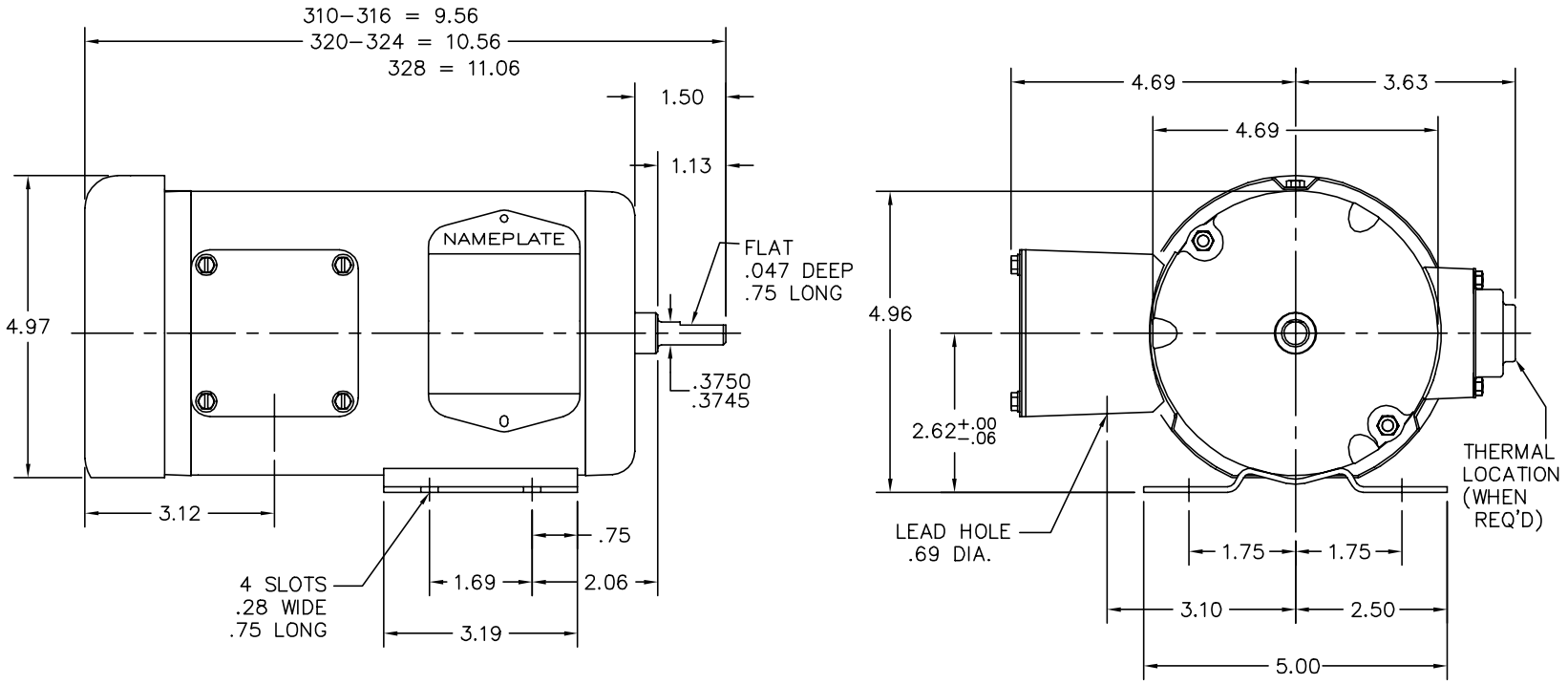

CUSTOMER IS RESPONSIBLE FOR DETERMINING THAT MOTOR PERFORMANCE IS SUITABLE IN THE APPLICATION.

REV. DESC: UPDATED KOBX & LID			BALDOR ELECTRIC Co.
REV. LTR: L	VERSION: 01	TDR: 000000426983	
33LY0870	FILE: \AAA\00001\052	REVISED: 09:30:20 04/09/2007	STD HORZ MODEL 33M NEMA 42 TEFC
	MTL: –	BY: ENROSTO	

33LY0870

BALDOR A MEMBER OF THE ABB GROUP

CD0005A05

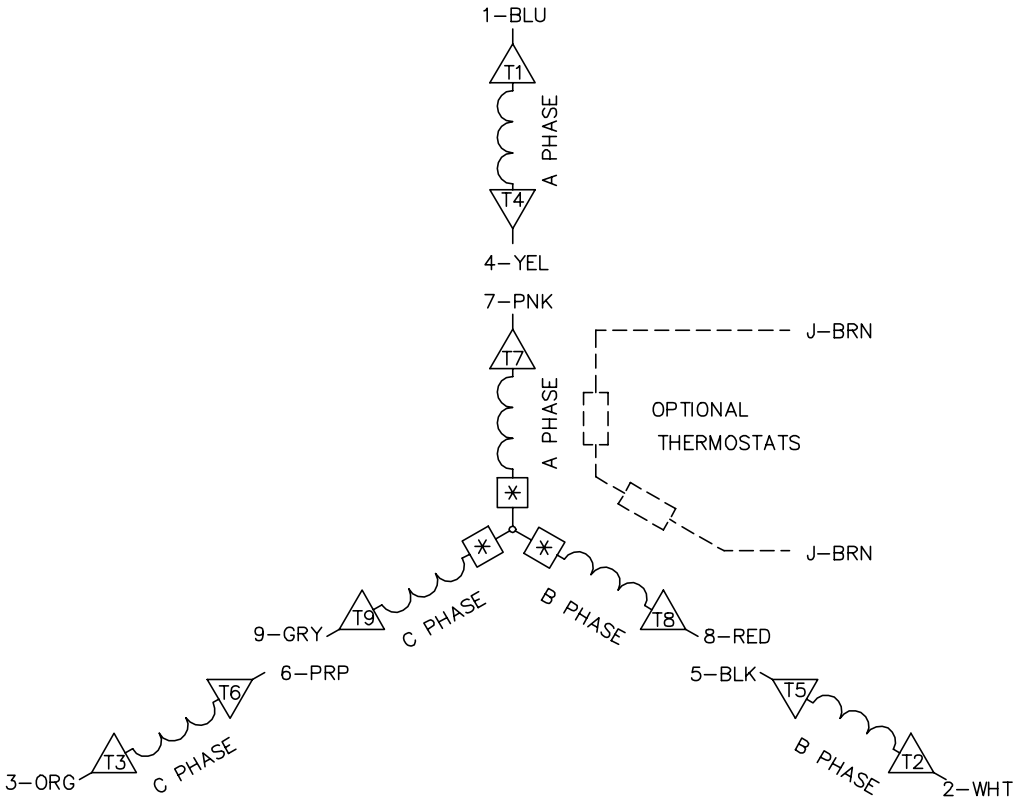

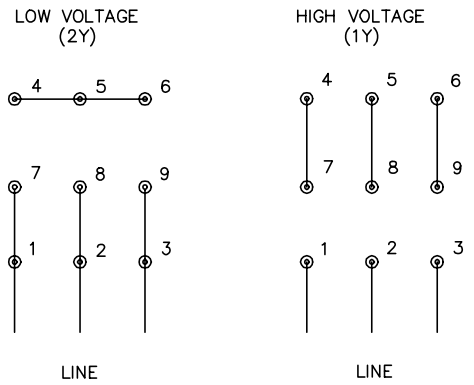

NOTES:

1. INTERCHANGE ANY TWO LINE LEADS TO REVERSE ROTATION.
2. OPTIONAL THERMOSTATS ARE PROVIDED WHEN SPECIFIED.
3. ACTUAL NUMBER OF INTERNAL PARALLEL CIRCUITS MAY BE A MULTIPLE OF THOSE SHOWN ABOVE.
4. LEAD COLORS ARE OPTIONAL. LEADS MUST ALWAYS BE NUMBERED AS SHOWN.
5. # =MAGNET WIRE COIL END WITH I.D. NUMBER.
6. * =MAGNET WIRE COIL END WITH I.D. SYMBOL.
7. SEE CW PRINT FOR NEST TO NEST CROSSOVER CONNECTIONS.

REV. DESC: ADD NEST NOTE			BALDOR • DODGE • RELIANCE
REV. LTR: C	VERSION: 03	TDR: 000000445597	
CD0005A05	FILE: \CKA\00024\847	REVISED: 12:51:06 11/15/2007	3PH, DV, 9 LEADS, CK
	MTL: –	BY: CKMICRO	

CD0005A05

BALDOR
A MEMBER OF THE ABB GROUP