BALDOR
A MEMBER OF THE ABB GROUP

BALDOR • RELIANCE

Product Information Packet

ECP44256TR-4

250HP,1190RPM,3PH,60HZ,449T,A44160M,TEFC

Copyright © All product information within this document is subject to Baldor Electric Company copyright © protection, unless otherwise noted.

Part Detail

Revision:	L	**Status:**	PRD/A	**Change #:**		**Proprietary:**	No
Type:	AC	**Prod. Type:**	A44160M	**Elec. Spec:**	A44WG3356	**CD Diagram:**	416820-036
Enclosure:	TEFC	**Mfg Plant:**		**Mech. Spec:**		**Layout:**	617427-003
Frame:	449T	**Mounting:**	F1	**Poles:**	06	**Created Date:**	08-16-2012
Base:		**Rotation:**	R	**Insulation:**	F	**Eff. Date:**	10-05-2015
Leads:	3#1/0 (02 per group)					**Replaced By:**	
Literature:		**Elec. Diagram:**					

BALDOR
A MEMBER OF THE ABB GROUP

Nameplate NP3238

CAT NO	ECP44256TR-4			SPEC NO.	P44G3952						
HP	250	AMPS	287			VOLTS	460			DESIGN	B
FRAME	449T	RPM	1190	HZ	60	AMB	40	SF	1.15		
D.E. BRG.DATA	NU222			O.D.E. BRG.DATA	6318			PH	3	DUTY	CONT
D.E. BRG.	110RU02M30X			TYPE	P	ENCL	TEFC	CODE	G		
O.D.E. BRG.	90BC03J30X					POWER FACTOR	85				
3/4 LOAD EFF.	96.0			MAX CORR KVAR	48.0						
TEMP CODE	T2C	TEMP =	230								
CHP HZ	60-90	CT HZ	30-60			VT HZ	0-60				
INVERTER-TEMP-CODE	T2C										
SER.NO.						MOTOR WEIGHT	3093				

INSUL.CLASS	F	NEMA NOM EFFICIENCY	95.8
GUARANTEED EFFICIENCY	95.4		

BALDOR
A MEMBER OF THE ABB GROUP

Nameplate NP2496L

MOBIL SHC -220 GREASE	

BALDOR
A MEMBER OF THE ABB GROUP

Parts List

Part Number	Description	Quantity
SA249722	SA P44G3952	1.000 EA
RA236582	RA P44G3952	1.000 EA
000613006PU	N/P (RELEASE QTY 10,000) UL CSA LABLE	1.000 EA
NP3238	SS CP XEX SEVERE DUTY MAIN NP	1.000 EA
000692000FF	N/P	1.000 EA
000692000VD	LABEL WARNING	1.000 EA
NP2496L	MOTOR LUBE NAMEPLATE	1.000 EA
004824015AP	GREASE MOBILITH SHC 220	1.156 LB
032018008CK	HHCS 3/8-16X1L PLATED	4.000 EA
032018020FK	HHCS 3/4-10X2-1/2 PLTD.	4.000 EA
032018030DK	HHCS 1/2-13X3-3/4 PLTD.	3.000 EA
032620016LA	SOCKET SET SCREW-449	3.000 EA
034017014AB	LCKW 3/8 STD. PLATED	4.000 EA
034180014DA	KEY 1/4X1/4X1-3/4 L	1.000 EA
034530064AB	P/NIP 1/8 X 8" L Pipe Nipple	1.000 EA
034530064BB	P/NIP 1/4X8 PLATED	1.000 EA
034631002AB	BUSH 1/4 TO 1/8 PLTD.	1.000 EA
035000001G	GREASE RELIEF FITTING, ALEMITE 317400	1.000 EA
034690005AB	PPLG 3/4 PLATED	1.000 EA
078557001E	FAN 440 078557001F	1.000 EA
083199082A	G28 FAN COVER MACHINING SHORT VERSION	1.000 EA
089490099A	G28 BRKT 089490098WCA KB	1.000 EA
412118006A	DRAIN	1.000 EA
415045002A	SLGR	1.000 EA

BALDOR
A MEMBER OF THE ABB GROUP

Parts List (continued)

Part Number	Description	Quantity
415072001B	CLAMP	1.000 EA
415096002A	CPLG 1/8 HEX TYPE	1.000 EA
032018004BK	HHCS 5/16-18X1/2 PLATED	3.000 EA
032018006BK	HHCS 5/16-18X3/4 PLATED	3.000 EA
032018020FK	HHCS 3/4-10X2-1/2 PLTD.	4.000 EA
032018030DK	HHCS 1/2-13X3-3/4 PLTD.	3.000 EA
034017013AB	LCKW 5/16 STD. PLATED	3.000 EA
034530056AB	1/8 X 7 PP NIPPLE	1.000 EA
034530056BB	P/NIP 1/4X7 SCHED 40	1.000 EA
034631002AB	BUSH 1/4 TO 1/8 PLTD.	1.000 EA
035000001G	GREASE RELIEF FITTING, ALEMITE 317400	1.000 EA
415915007G	GASK, LAC	1.000 FT
089490101A	G28 BRKT 089490100WCA	1.000 EA
412118006A	DRAIN	1.000 EA
415045002D	SLGR - 440	1.000 EA
415096002A	CPLG 1/8 HEX TYPE	1.000 EA
418151014H	RETAIN RING	1.000 EA
702623022A	G28 AIR DEFLECTOR DRIVE END -- PLASTIC	1.000 EA
702623013A	THERMAL BARRIER -- G28 -- BRACKET MTD	1.000 EA
033512004LB	HHTTS 1/4-20X1/2 PLTD.	1.000 EA
035000001A	ALFTG 1/8" 1610-BL	1.000 EA
035000001A	ALFTG 1/8" 1610-BL	1.000 EA
067053014A	GASK 440	1.000 EA
076870000B	+CBCST BLKT - 440	1.000 EA

BALDOR
A MEMBER OF THE ABB GROUP

076871000A	+CBOX CVR BLKT - 449	1.000 EA
406056007A	GASKET, 440	1.000 EA
406099000A	PLUG - FAN COVER 320-440	1.000 EA
415000103D	T/LUG #4AWG-1/0AWG W/HOLE FOR .250 BOLT	1.000 EA
418150003A	GREASE FITTING CAP	1.000 EA
418150003A	GREASE FITTING CAP	1.000 EA
033775004EA	DRSCR #6-1/4 304 S.S.	2.000 EA
034180054KA	KEY 7/8X7/8X6-3/4 L	1.000 EA
MG1025N19	WILKO 778.50 BLUE GREEN - 55 GAL DRUMS	0.440 GA
L482401016	SPRAY AC-29-7S	0.019 GA
421948051	LABEL, MYLAR	1.000 EA
418151014G	RETAIN RING	1.000 EA
000692000RT	N/P	1.000 EA
LB1449	DIV-2/NEC WARNING LABEL	1.000 EA

BALDOR A MEMBER OF THE ABB GROUP

REL. S.O.	FRAME	HP	TYPE	PHASE/ HERTZ	RPM	VOLTS
	449TD	250	P	3/60	1190	460

AMPS	DUTY	AMB °C/ INSUL.	S.F.	NEMA DESIGN	CODE LETTER	ENCL.
287	CONT	40/F	1.15	B	G	TEFC

E/S	ROTOR	TEST S.O.	TEST DATE	STATOR RES.@25 °C OHMS (BETWEEN LINES)
833228	418143083LE	---	---	.0163

PERFORMANCE

LOAD	HP	AMPERES	RPM	% POWER FACTOR	% EFFICIENCY
NO LOAD	0	82.3	1200	4.07	0
1/4	62.6	121	1197	51.7	93.8
2/4	125	166	1195	73.3	95.8
3/4	187	223	1192	81.8	96.0
4/4	250	287	1189	85.2	95.8
5/4	312	355	1186	86.4	95.3

SPEED TORQUE

	RPM	TORQUE % FULL LOAD	TORQUE LB.-FT.	AMPERES
LOCKED ROTOR	0	149	1640	1942
PULL UP	240	116	1278	1872
BREAKDOWN	1149	268	2960	1113
FULL LOAD	1189	100	1104	287

AMPERES SHOWN FOR 460. VOLT CONNECTION. IF OTHER VOLTAGE CONNECTIONS ARE AVAILABLE, THE AMPERES WILL VARY INVERSELY WITH THE RATED VOLTAGE

REMARKS: TYPICAL DATA
NEMA NOM. EFF. - 95.8%
GUAR. MIN. EFF. - 95.4%

BALDOR A MEMBER OF THE ABB GROUP

DR. BY J.J.HARRISON
CK. BY W.L.SMITH
APP. BY W.L.SMITH
DATE 08/31/10

A-C MOTOR PERFORMANCE DATA

A44WG3356-R001
ISSUE DATE 02/25/16

Printed on 2/25/16 14:54 @ bengap01.ba

REL S.O.	RPM 1190	S.F. 1.15	ROTOR 418143083LE
FRAME 449TD	VOLTS 460	NEMA DESIGN B	TEST S.O. TYPICAL DATA
HP 250	AMPS 287	CODE LETTER G	TEST DATE ---
TYPE P	DUTY CONT	ENCLOSURE TEFC	STATOR RES.@ 25 °C .0163
PHASE/HERTZ 3/60	AMB °C/INSUL 40/F	E/S 833228	OHMS (BETWEEN LINES)

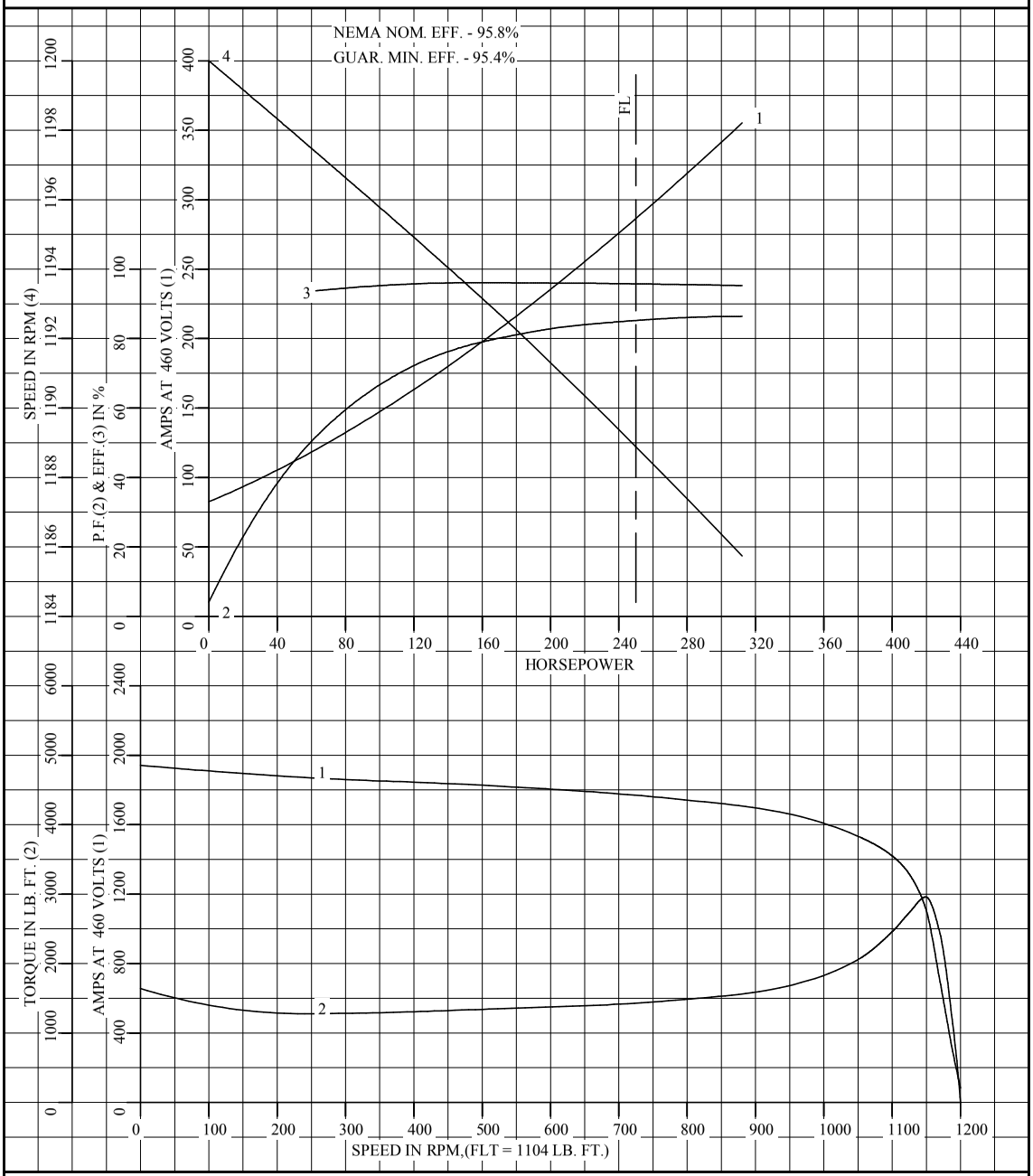

AMPERES SHOWN FOR 460 VOLT CONNECTION, IF OTHER VOLTAGE CONNECTIONS ARE AVAILABLE, THE AMPERES WILL VARY INVERSELY WITH THE RATED VOLTAGE.

BALDOR A MEMBER OF THE ABB GROUP

DR. BY	J.J.HARRISON
CK. BY	W.L.SMITH
APP. BY	W.L.SMITH
DATE	08/31/10

A-C MOTOR PERFORMANCE CURVES

A44WG3356-R001

ISSUE DATE 02/25/16

Printed on 2/25/16 14:54 @ bengap01.baldor.com

BALDOR A MEMBER OF THE ABB GROUP

REL. S.O.	RPM 1190	S.F. 1.15	ROTOR 418143083LE
FRAME 449TD	VOLTS 460	NEMA DESIGN B	TEST S.O. TYPICAL DATA
HP 250	AMPS 287	CODE LETTER G	TEST DATE ---
TYPE P	DUTY CONT	ENCLOSURE TEFC	STATOR RES.@ 25 °C.0163
PHASE/HERTZ 3/60	AMB °C/INSUL 40/F	E/S 833228	OHMS (BETWEEN LINES)

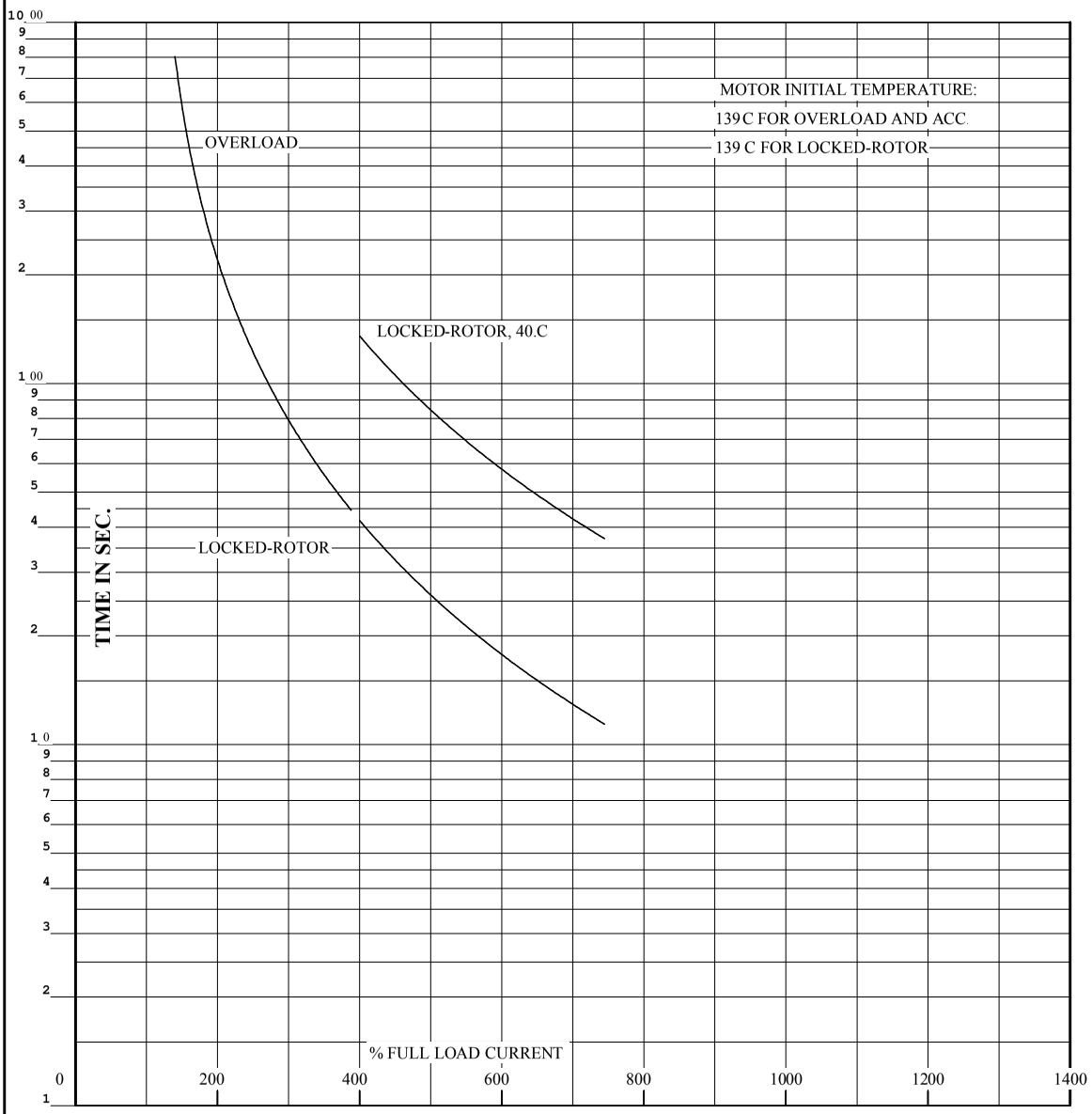

REMARKS:

THERMAL LIMIT CURVE

NEMA NOM. EFF. - 95.8%

GUAR. MIN. EFF. - 95.4%

AMPERES SHOWN FOR 460 VOLT CONNECTION, IF OTHER VOLTAGE CONNECTIONS ARE AVAILABLE, THE AMPERES WILL VARY INVERSELY WITH THE RATED VOLTAGE.

BALDOR A MEMBER OF THE ABB GROUP

DR. BY J.J.HARRISON
CK. BY W.L.SMITH
APP. BY W.L.SMITH
DATE 08/31/10

A-C MOTOR PERFORMANCE CURVES

A44WG3356-R001

ISSUE DATE 02/25/16

Printed on 2/25/16 14:54 @ bengap01.ba

617427-003

DUTY MASTER ALTERNATING CURRENT MOTORS

SQUIRREL-CAGE INDUCTION

ENCLOSURE: TOTALLY ENCLOSED

FRAME 449T ABOVE NEMA RATINGS (1800 RPM MAX)

COOLING: FAN COOLED

MOUNTING: FOOT

INCLUDES 447T FRAME MOUNTING HOLES

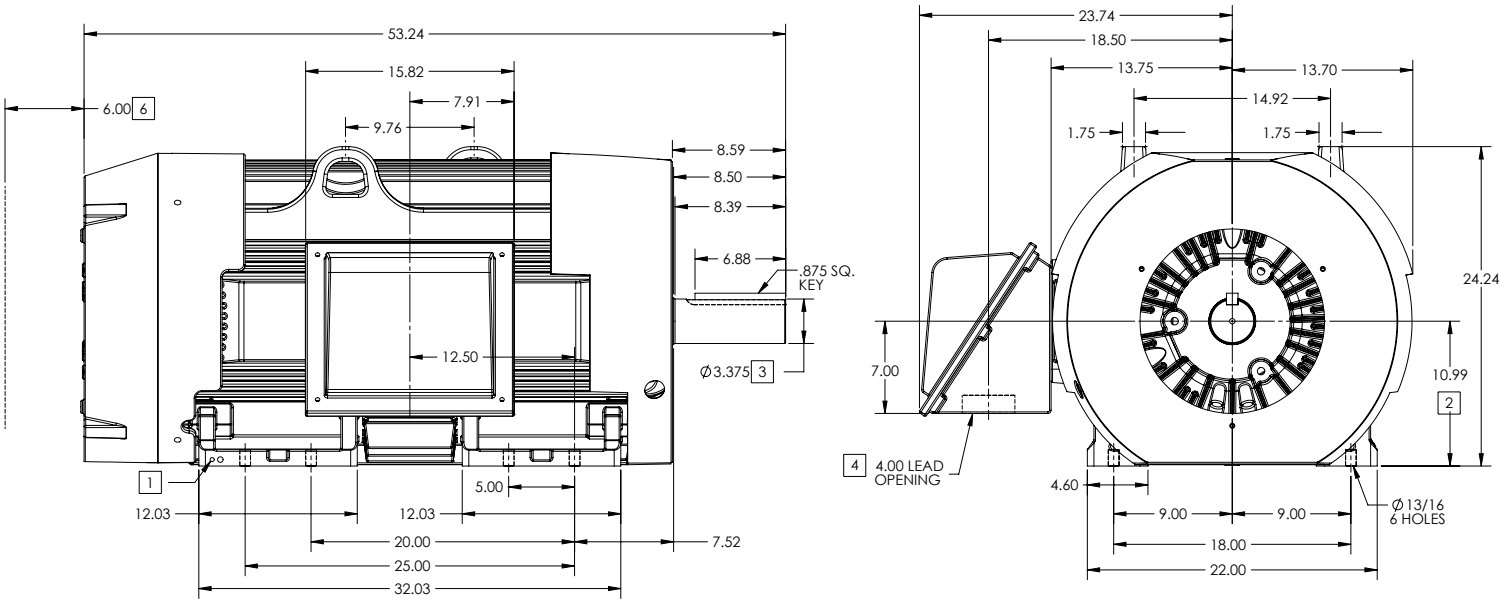

1. GROUND HOLES QTY 1 1/2-13 TAP; QTY 1 3/8-16 TAP
2. VARIES +.00,-.06
3. VARIES +.000,-.001
4. ON STANDARD MOTORS THIS IS CONDUIT SIZE. ON XT AND CORROSION PROOF MOTOR THIS IS PIPE TAP.
5. MOTOR WEIGHTS MAY VARY BY 15% DEPENDING ON RATING.
6. OBSTRUCTION MUST NO ENCROACH ON AIR INLET

CONDUIT BOX LOCATED ON OPPOSITE SIDE WHEN F-2.
IF MOUNTING CLEARANCE DETAILS ARE REQUIRED, CONSULT FACTORY.
MAXIMUM PERMISSIBLE SHAFT RUNOUT WHEN MEASURED AT END OF STANDARD SHAFT EXTENSION IS .003" T.I.R. TO 5 INCH DIA.

5 WEIGHT (LBS): 3080

DRIVE END AIR DEFLECTOR IS ONLY INCLUDED WHEN NECESSARY.

DIMENSIONS ARE IN INCHES; SEE SHEET 2 FOR DIMENSIONS IN MILLIMETERS

CUSTOMER IS RESPONSIBLE FOR DETERMINING THAT MOTOR PERFORMANCE IS SUITABLE IN THE APPLICATION.

SHEET NUMBER 1 OF 2

617427-003

REV. DESC: CHANGING ENCLOSURE TO "TOTALLY ENCLOSED"WAS"UL..."			
REV: A	VERSION: 01	REVISED: 08:28:52 02/15/2013	TDR: 000000786306
MODEL NO. 617427-003			
BY: MGHWCG			C

BALDOR

G449T/447T STD – FOOTED – SIDE/CENTER C/B

617427-003

BALDOR A MEMBER OF THE ABB GROUP

617427-003

DUTY MASTER ALTERNATING CURRENT MOTORS

SQUIRREL-CAGE INDUCTION

ENCLOSURE: TOTALLY ENCLOSED

FRAME 449T ABOVE NEMA RATINGS (1800 RPM MAX)

COOLING: FAN COOLED

MOUNTING: FOOT

INCLUDES 447T FRAME MOUNTING HOLES

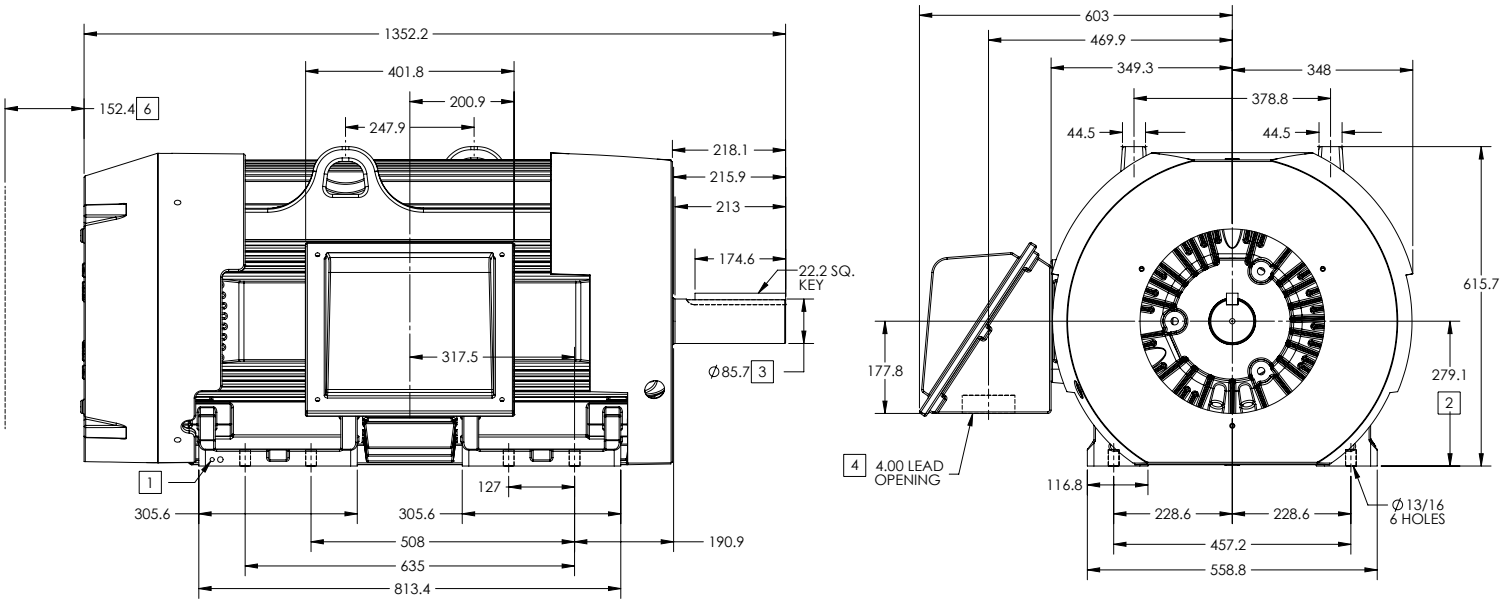

1. GROUND HOLES QTY 1 1/2-13 TAP; QTY 1 3/8-16 TAP
2. VARIES +.00,-.06
3. VARIES +.000,-.001
4. ON STANDARD MOTORS THIS IS CONDUIT SIZE. ON XT AND CORROSION PROOF MOTOR THIS IS PIPE TAP.
5. MOTOR WEIGHTS MAY VARY BY 15% DEPENDING ON RATING.
6. OBSTRUCTION MUST NO ENCROACH ON AIR INLET

CONDUIT BOX LOCATED ON OPPOSITE SIDE WHEN F-2.
IF MOUNTING CLEARANCE DETAILS ARE REQUIRED, CONSULT FACTORY.
MAXIMUM PERMISSIBLE SHAFT RUNOUT WHEN MEASURED AT END OF STANDARD SHAFT EXTENSION IS .08 MM T.I.R. TO 127 MM DIA.

5 WEIGHT (KGS): 1400

DRIVE END AIR DEFLECTOR IS ONLY INCLUDED WHEN NECESSARY.

DIMENSIONS ARE IN MILLIMETERS; SEE SHEET 1 FOR DIMENSIONS IN INCHES

CUSTOMER IS RESPONSIBLE FOR DETERMINING THAT MOTOR PERFORMANCE IS SUITABLE IN THE APPLICATION.

SHEET NUMBER 2 OF 2

617427-003

REV. DESC: CHANGING ENCLOSURE TO "TOTALLY ENCLOSED"WAS"UL..."			
REV: A	VERSION: 01	REVISED: 08:28:52 02/15/2013	TDR: 000000786306
MODEL NO. 617427-003			
BY: MGHWCG			C

BALDOR

G449T/447T STD – FOOTED – SIDE/CENTER C/B

617427-003

BALDOR A MEMBER OF THE ABB GROUP

416820–036

A–C MOTOR
CONNECTION DIAGRAM
STANDARD 3 LEAD CONNECTED

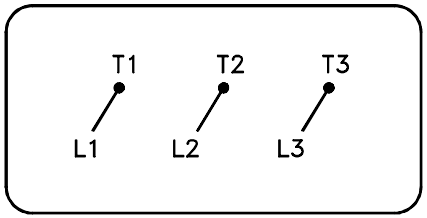

(N.P. 1575–BA)

416820–036

REV. DESC: LOADED TO BUS, C/R 335225			BALDOR
REV. LTR: –	VERSION: 00	TDR: 000000538207	
FILE: \MGA\00000\682		REVISED: 11:54:06 04/30/2010	CONN DIAG – STANDARD 3 LEAD
MTL: –		BY: RAGRA	SH 1 of 1

BALDOR
A MEMBER OF THE ABB GROUP

Marketing maintained PDF of MN408:

http://www.baldor.com/support/Literature/Load.ashx/MN408?ManNumber=MN408

BALDOR
A MEMBER OF THE ABB GROUP

Marketing maintained PDF of MN416:

http://www.baldor.com/support/Literature/Load.ashx/MN416?ManNumber=MN416

BALDOR
A MEMBER OF THE ABB GROUP