BALDOR
A MEMBER OF THE ABB GROUP

BALDOR • RELIANCE

Product Information Packet

EM50402S-2340

400HP,3576RPM,3PH,60HZ,5010,TEFC,F1

Copyright © All product information within this document is subject to Baldor Electric Company copyright © protection, unless otherwise noted.

Part Detail

Revision:	H	**Status:**	PRD/A	**Change #:**		**Proprietary:**	No
Type:	AC	**Prod. Type:**	A50184M	**Elec. Spec:**	A50WG4877	**CD Diagram:**	416820-004
Enclosure:	TEFC	**Mfg Plant:**		**Mech. Spec:**		**Layout:**	616159-806
Frame:	5010	**Mounting:**	F1	**Poles:**	02	**Created Date:**	02-10-2014
Base:		**Rotation:**	R	**Insulation:**	F	**Eff. Date:**	08-11-2016
Leads:	6#6 4824-6-P					**Replaced By:**	
Literature:		**Elec. Diagram:**					

BALDOR A MEMBER OF THE ABB GROUP

Nameplate NP3131

ENERGY EFFICIENT				SERIAL NO.							
CATALOG NO.	EM50402S-2340			SPEC NO.	KGPEM50402S-2340						
HP	400	RPM	3576	FRAME	5010	HZ	60			SERVICE FACTOR	1.15
VOLTS	2300/4000	F.L. AMPS	87.7/50.4	PHASE	3	TYPE		ENCL.	TEFC		
F.L.EFF.	95	F.L.P.F.	89	MOTOR WEIGHT	4580					INSUL.CLASS	F
DESIGN	-	NEMA CODE	G	MAX AMBIENT	40			DUTY	CONT		
	115	C RISE/	RES	AT		HP	460	AMPS	101/57.9		
D.E. BRG.	65BC03J40X			O.D.E. BRG.	65BC03J40X						
WDG. THERMAL	100 OHM	QTY.	6	BRG. THERMAL							
LUBE	POLYREX EM										
VOLTS	120/240	AMPS	2.9/1.46	WATTS	350/350	QTY	2				
CERTIFICATE OF COMP NO.	LR52580										
	NEMA NOM EFF = 95.0%										

BALDOR
A MEMBER OF THE ABB GROUP

Parts List

Part Number	Description	Quantity
SA276836	SA KGPEM50402S-2340	1.000 EA
RA263394	RA KGPEM50402S-2340	1.000 EA
482406006P	06 AWG,UL3499,BLACK,7.5kV,BELDEN#37506	42.000 FT
606800016D	RTD LAC	7.000 EA
069306003B	CABLE TIE 14 T&B L14509C	9.000 EA
482413004Y	#4 SLEEVING (GREEN) PER FT	12.000 FT
424731025P	HEATER LAC	2.000 EA
034692001AB	HCSPP 1/8" PLATED	2.000 EA
034692001AB	HCSPP 1/8" PLATED	2.000 EA
616156033A	INNER CAP ODE	1.000 EA
032018004BK	HHCS 5/16-18X1/2 PLATED	4.000 EA
424231001A	SLT FLAT C'T'S'K' HDMS	1.000 EA
410700002J	WAVY WSHR,ODE CAP	1.000 EA
616156032A	INNER CAP DE	1.000 EA
034017013AB	LCKW 5/16 STD. PLATED	4.000 EA
035051013AA	BBLCW W-13 BLACK OXIDE	2.000 EA
616145011A	THERMAL BARRIER, LAC	1.000 EA
T-0346-8	HALF KEY BALANCE 004600044H	1.000 EA
415826011A	INSUL WSHR ODE CAP	1.000 EA
415915007C	GASK, LAC	1.000 EA
036150030NA	SKHD SSCR;STAT;BT-G508	2.000 EA
034690004AB	PPLG 1/2" PLATED	4.000 EA
034690004AB	PPLG 1/2" PLATED	2.000 EA
034690004AB	PPLG 1/2" PLATED	2.000 EA

BALDOR A MEMBER OF THE ABB GROUP

Parts List (continued)

Part Number	Description	Quantity
034691008AB	1 1/2 PIPE PLUG- BIN STOCK	2.000 EA
034690002AB	"unbulked" PPLG 1/4" PLTD.	4.000 EA
034000014AB	WSH ID.406 OD.812 TH.065	4.000 EA
807475027A	BRACKET FE GP G30 6313 VIB PROV, ENGLISH	1.000 EA
032018036CK	HHCS 3/8-16X4-1/2 PLTD.	4.000 EA
035000001AB	ALFTG CAT.NO.1627-B PLTD	1.000 EA
032018036CK	HHCS 3/8-16X4-1/2 PLTD.	4.000 EA
035000001AB	ALFTG CAT.NO.1627-B PLTD	1.000 EA
032018004AK	HHCS 1/4-20X1/2 PLATED	4.000 EA
710607004WPA	THRM BARRIER BRKT, LAC	1.000 EA
034530058EB	PP NIPP ODE GRS DR	1.000 EA
034630002AJ	PP CPLG ODE	1.000 EA
034530058EB	PP NIPP ODE GRS DR	1.000 EA
034630002AJ	PP CPLG ODE	1.000 EA
MP1011A01	4 MIL X 12FT X 100 FT POLYETHYLENE	0.100 RL
034630005AJ	PP CPLG ODE GRS DR	1.000 EA
034017014AB	LCKW 3/8 STD. PLATED	4.000 EA
406673001E	CAP PLUG	2.000 EA
032130022HB	HXSCHCS BE BRKT- b/s 4/11/14	4.000 EA
034630005AJ	PP CPLG ODE GRS DR	1.000 EA
034017014AB	LCKW 3/8 STD. PLATED	4.000 EA
406673001E	CAP PLUG	2.000 EA
032130022HB	HXSCHCS BE BRKT- b/s 4/11/14	4.000 EA
034017014AB	LCKW 3/8 STD. PLATED	4.000 EA

BALDOR
A MEMBER OF THE ABB GROUP

032018008CK	HHCS 3/8-16X1L PLATED	4.000 EA
034000012AB	WSHR 1/4 STD. PLATED	4.000 EA
415915007B	GASK, 46" LAC	1.000 EA
705500324X	TERMINAL BOX WELDMENT 19X19X14	1.000 EA
705500324F	GASK, TERM BOX, LAC, FRONT COVER	1.000 EA
705500324D	CVR T/BOX FRONT	1.000 EA
705500324G	GASK, TERM BOX, LAC, BOTTOM COVER	1.000 EA
705500324E	BOTTOM COVER	1.000 EA
033519006MC	SHWHTS, 5/16-18 THREAD CUTTING	30.000 EA
418199008B	N/P	1.000 EA
032130012HB	HXSCHCS BE BRKT	1.000 EA
034530082BB	PP NIP ODE GRS FL	1.000 EA
035000001F	RELIEF FTG. G/DRN	1.000 EA
034530082BB	PP NIP ODE GRS FL	1.000 EA
035000001F	RELIEF FTG. G/DRN	1.000 EA
034017012AB	LCKW 1/4 STD. PLATED	4.000 EA
415045002L	SLGR	1.000 EA
034600007AB	RED.BSHG.GRS/DRN	1.000 EA
034600007AB	RED.BSHG.GRS/DRN	1.000 EA
415916013L	T/BLK S/HTR LAC	2.000 EA
807470006A	AIR DEFL B/E BRKT	1.000 EA
034017014AB	LCKW 3/8 STD. PLATED	4.000 EA
419512002A	ID TAG, ROLL LAC	0.002 RL
PK4110A11	SHAFT BLOCKING	1.000 EA
PK5006A09	WOOD BASE SHIPPING BASE	1.000 EA
041009000FB	TERMINAL LUG	6.000 EA

041009038G	TERMINAL LUG	6.000 EA
001767000CC	N/P	1.000 EA
000692000SC	N/P	5.000 EA
482406006P	06 AWG,UL3499,BLACK,7.5kV,BELDEN#37506	12.000 FT
034690001AB	SQHDPLG, COND	2.000 EA
410700000DD	WAVY WASHER FAN-	1.000 EA
034141162AB	RETAINER RING,FAN	1.000 EA
419512012S	SHRINK MKR,	1.000 EA
034017013AB	LCKW 5/16 STD. PLATED	4.000 EA
807473001XBB	GRILL, GP - FAN COVER, G30/5000, ENGLISH	1.000 EA
807475026A	BRACKET FE GP	1.000 EA
033102013AB	NUT 5/16-18 PLATED	4.000 EA
807473044A	FAN COVER ODE	1.000 EA
034000016AB	WSHR .531ID 1.062OD .095	4.000 EA
032375004HB	SLRHMS 8-32X1/2 PLATED	2.000 EA
415915001A	GASK, LAC	7.000 FT
482413004Y	#4 SLEEVING (GREEN) PER FT	30.000 FT
482415000A	GREASE (MOBIL POLYREX EM)	1.461 LB
034186023FA	KEY ODE FAN	1.000 EA
049843019E	PLTE NNN 049843049WCA	1.000 EA
065774015A	TBRD 180-280	1.000 EA
075458000AF	CONDUIT BOX	1.000 EA
415917004A	N/P	1.000 EA
482413003Y	#3 SLEEVING (GREEN)	3.000 FT
032018006AK	HHCS 1/4-20X3/4L PLATED	4.000 EA
034530040HB	P/NIP 1-1/2X5L PLATED-b/s	1.000 EA

049843019G	PLTE 320 049843048WCA	1.000 EA
071421043G	C/BOX WDG RTD	1.000 EA
032375005HB	RHMS 8-32X5/8L PLATED	4.000 EA
032018007CK	HHCS 3/8-16X7/8L PLATED	4.000 EA
034530040HB	P/NIP 1-1/2X5L PLATED-b/s	1.000 EA
403938056A	GASK, LAC	1.000 EA
403938055A	GASK, TBOX MTG, LAC	1.000 EA
032018014DK	HHCS 1/2-13X1-3/4 PLTD	4.000 EA
041009003F	TERMINAL LUG	4.000 EA
032018005CK	HHCS; 3/8X5/8	4.000 EA
705547088R	FAN, LAC	1.000 EA
403938027E	GASK, LAC	1.000 EA
041009003D	T & B LUG (A116)	18.000 EA
803076025A	SPACER TERM.BOX	1.000 EA
032018016DK	HHCS 1/2-13X2L PLTD.	4.000 EA
709239013B	AIR INLT BAFF FC -13A	1.000 EA
004793040A	BUTT SPLICE SPHTR	2.000 EA
419512012SG	LABELS, HEAT SHRINK SET	1.000 EA
419512012SG	LABELS, HEAT SHRINK SET	1.000 EA
402558004A	BRDRN- added to b/s 5/31	1.000 EA
419306099B	N/P - MAKE IN ASSEMBLY	1.000 EA
419306099AG	N/P - MAKE IN ASSEMBLY	1.000 EA
419306099A	N/P - MAKE IN ASSEMBLY	1.000 EA
034691004AB	1/2 PIPE PLUG	2.000 EA
406673000B	PPLG	1.000 EA
406673000F	PPLG	1.000 EA

412027034A	SUPPORT(T.B.) - G512	1.000 EA
415917001A	RTD TAG	4.000 EA
415916013C	T/BLK S/HTR LAC	1.000 EA
075459000A	C/BOX CVR W75459	1.000 EA
032130006AB	HSHCS 1/4-20X3/4L PLTD.	2.000 EA
065564000A	GASKET	1.000 EA
071422000A	C/BOX W 071422000	1.000 EA
047993000B	GASKET LAC	1.000 EA
032130007AB	HXSCHCS C/B CVR-449	10.000 EA
034180032HA	KEY 5/8X5/8X4 L bin stocked	1.000 EA
NP3131	"BALDOR ONLY" INDUSTRIAL MOTOR, SS,	1.000 EA
406255394A	N/P	1.000 EA
000692000EF	CAUTION LABEL	1.000 EA
482403000BVZ	WILCO NO. 789.201 Per Eng use MG1200G96-	1.000 GA
609911003A	NAMEPLATE SUPPORT	1.000 EA
033775004EA	DRSCR #6-1/4 304 S.S.	10.000 EA
000692000CL	N/P	1.000 EA
000692000FR	WARNING, HIGH VOLTAGE LABEL	1.000 EA
406255121B	N/P	1.000 EA
406991001SL	INSTRUCTION MANUAL	1.000 EA
412043012C	PLUG - 210	1.000 EA
LB1532	BALDOR LABEL, 12.00 LONG X 2.00 HIGH	2.000 EA
032080006LB	1/4 -20 X 3/4 HWHMS	22.000 EA
034000016AB	WSHR .531ID 1.062OD .095	4.000 EA

BALDOR -RELIANCE SALES ORDER	FRAME	HP	TYPE	PHASE	HERTZ	RPM
A50WG4877-R001	5010	400	P	3	60	3576

VOLTS	AMPS	DUTY	AMB°C	INSUL	S.F.	NEMA DESIGN
2300 / 4000	87.7 / 50.4	CONT	40	F	1.15	---

CODE LETTER	ENCL.	ROTOR WK^2 (lb-ft^2)	STATOR RES.@25°C OHMS (BETWEEN LINES)	TYPICAL DATA
G	TEFC	57	0.19480 / 0.58440	

PERFORMANCE

LOAD	HP	AMPERES	RPM	% POWER FACTOR	% EFFICIENCY
NO LOAD	0	11.6	3600	9.6	0.0
1/4	100	17.8	3594	67.1	90.1
2/4	200	27.5	3588	83.4	93.9
3/4	300	38.6	3582	88.3	94.8
4/4	400	50.4	3576	89.9	95.0
5/4	500	62.9	3569	90.3	94.8
6/4	600	76.1	3562	89.9	94.4

SPEED TORQUE

	RPM	TORQUE % FULL LOAD	TORQUE LB-FT	AMPERES
LOCKED ROTOR	0	81	476	317.6
PULL UP	540	78	461	314.4
BREAKDOWN	3469	277	1626	193.4
FULL LOAD	3576	100	588	50.4

AMPERES SHOWN FOR 4000 VOLT CONNECTION(S). IF OTHER VOLTAGE CONNECTIONS ARE AVAILABLE, THE AMPERES WILL VARY INVERSELY WITH THE VOLTAGE.

REVISION 0

BALDOR A MEMBER OF THE ABB GROUP

DR. BY C. Evans
CK. BY J. LaVallee
APP. BY B. LeRoy
DATE 2/3/2014

A-C MOTOR PERFORMANCE

VGPM402E4
SH 1 OF 7
ISSUE DATE: 2/3/2014

REL S.O.	A50WG4877-R001	HERTZ	60	AMB°C	40	CODE LETTER	G
FRAME	5010	RPM	3576	INSUL	F	ENCLOSURE	TEFC
HP	400	VOLTS	2300 / 4000	S.F.	1.15	STATOR RES.@25°C	0.19480 / 0.58440
TYPE	P	AMPS	87.7 / 50.4	NEMA DESIGN	---	OHMS (BETWEEN LINES)	
PHASE	3	DUTY	CONT	ROTOR WK² (lb-ft²)	57	TYPICAL DATA	

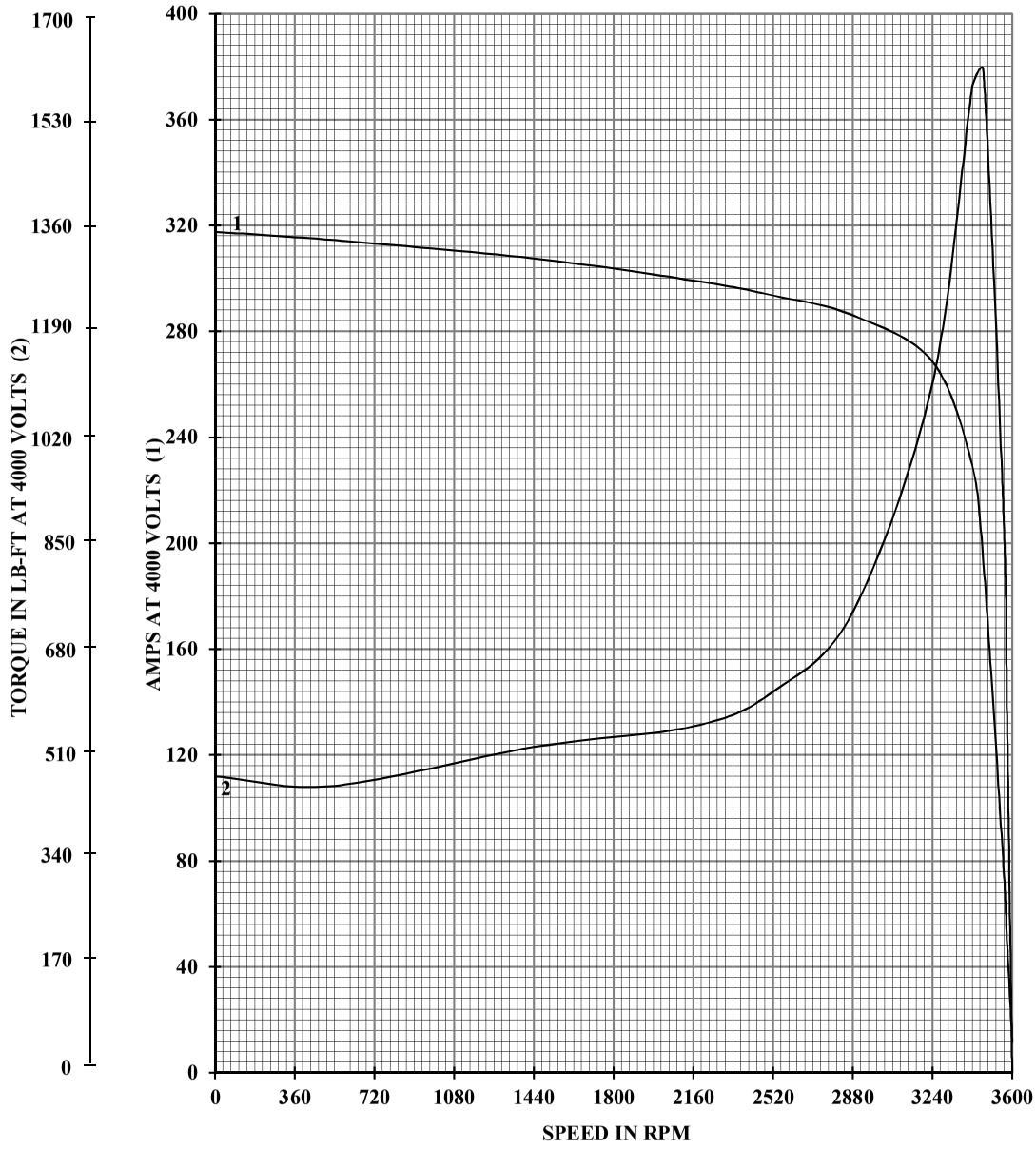

AMPERES SHOWN FOR **4000** VOLT CONNECTION, IF OTHER VOLTAGE CONNECTIONS ARE AVAILABLE, THE AMPERES WILL VARY INVERSELY WITH THE VOLTAGE.

REVISION 0

BALDOR A MEMBER OF THE ABB GROUP	DR. BY C. Evans CK. BY J. LaVallee APP. BY B. LeRoy DATE 2/3/2014	**A-C MOTOR PERFORMANCE CURVES**	VGPM402E4K **SH 2 OF 7** **ISSUE DATE: 2/3/2014**

REL S.O.	A50WG4877-R001	HERTZ	60	AMB°C	40	CODE LETTER	G
FRAME	5010	RPM	3576	INSUL	F	ENCLOSURE	TEFC
HP	400	VOLTS	2300 / 4000	S.F.	1.15	STATOR RES.@25°C	0.19480 / 0.58440
TYPE	P	AMPS	87.7 / 50.4	NEMA DESIGN	---	OHMS (BETWEEN LINES)	
PHASE	3	DUTY	CONT	ROTOR WK² (lb-ft²)	57	TYPICAL DATA	

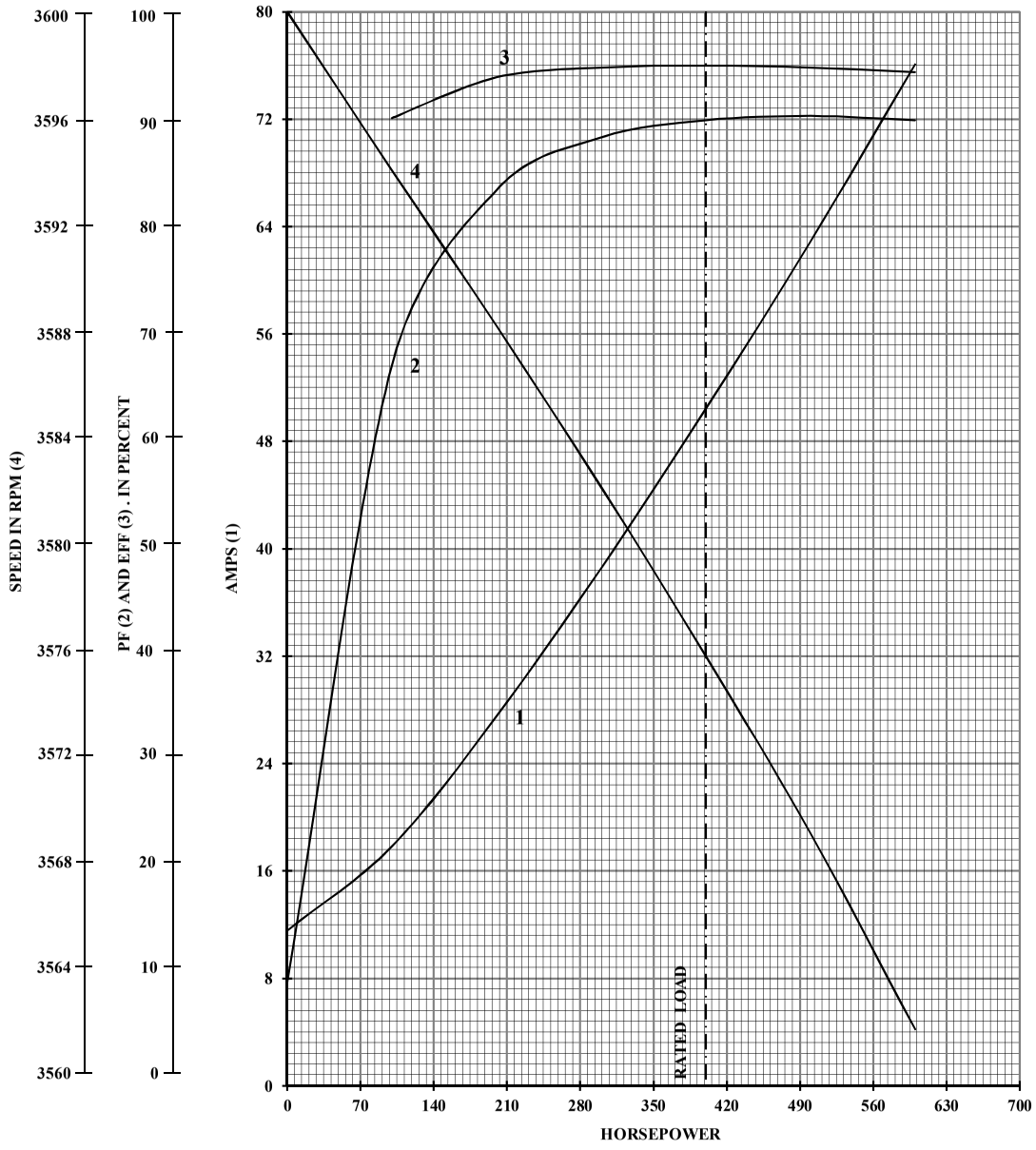

AMPERES SHOWN FOR **4000** VOLT CONNECTION, IF OTHER VOLTAGE CONNECTIONS ARE AVAILABLE, THE AMPERES WILL VARY INVERSELY WITH THE VOLTAGE.

REVISION 0

BALDOR A MEMBER OF THE ABB GROUP	DR. BY C. Evans CK. BY J. LaVallee APP. BY B. LeRoy DATE 2/3/2014	**A-C MOTOR PERFORMANCE CURVES**	VGPM402E4K **SH 3 OF 7** **ISSUE DATE: 2/3/2014**

REL S.O.	A50WG4877-R001	HERTZ	60	AMB°C	40	CODE LETTER	G
FRAME	5010	RPM	3576	INSUL	F	ENCLOSURE	TEFC
HP	400	VOLTS	2300 / 4000	S.F.	1.15	STATOR RES.@25°C	0.19480 / 0.58440
TYPE	P	AMPS	87.7 / 50.4	NEMA DESIGN	---	OHMS (BETWEEN LINES)	
PHASE	3	DUTY	CONT	ROTOR WK^2 (lb-ft^2)	57	TYPICAL DATA	

THERMAL LIMIT CURVES

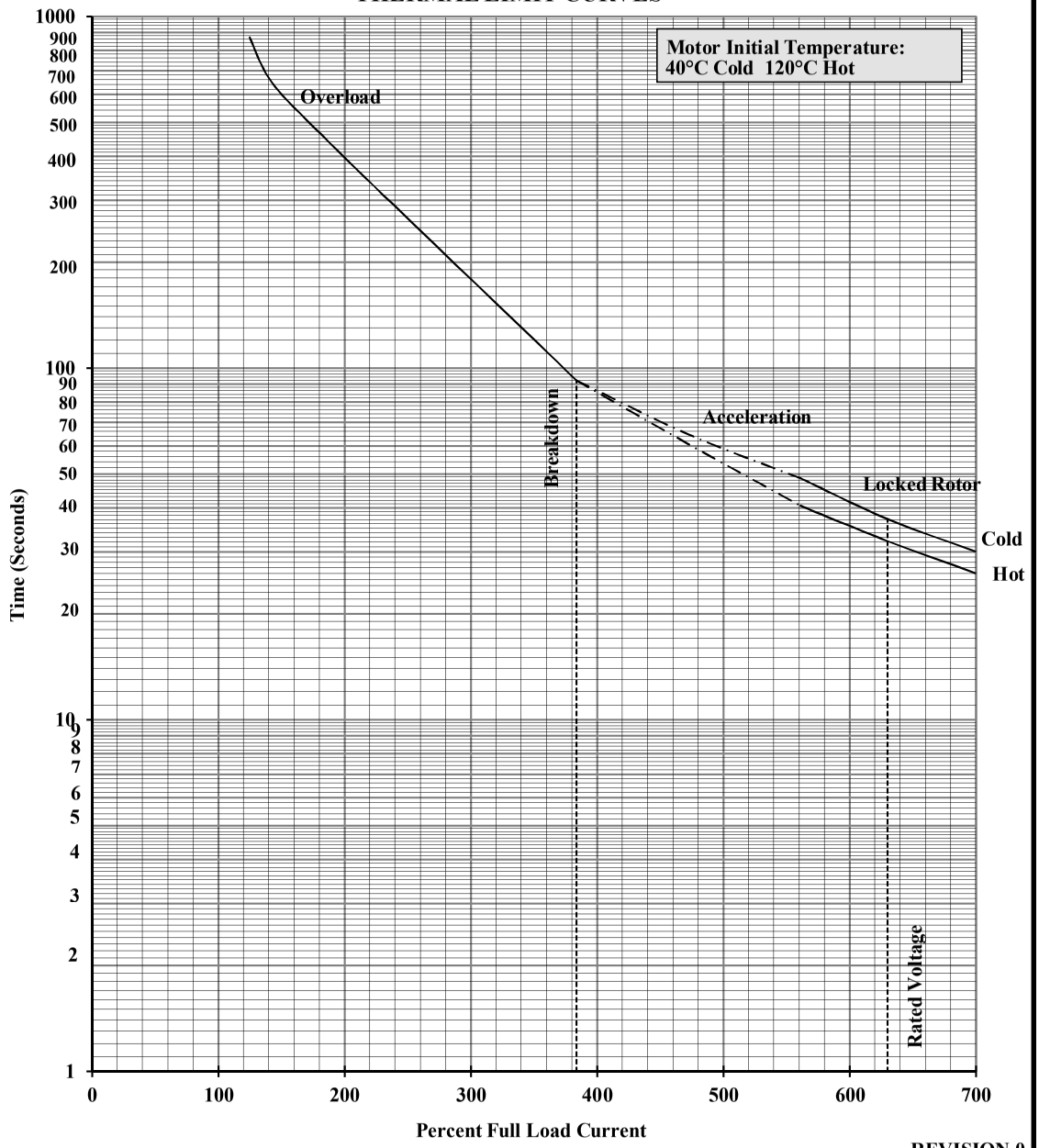

REVISION 0

BALDOR A MEMBER OF THE ABB GROUP	DR. BY C. Evans CK. BY J. LaVallee APP. BY B. LeRoy DATE 2/3/2014	A-C MOTOR PERFORMANCE	VGPM402E4K SH 4 OF 7 ISSUE DATE: 2/3/2014

REL S.O.	A50WG4877-R001	HERTZ	60	AMB°C	40	CODE LETTER	G
FRAME	5010	RPM	3576	INSUL	F	ENCLOSURE	TEFC
HP	400	VOLTS	2300 / 4000	S.F.	1.15	STATOR RES.@25°C	0.19480 / 0.58440
TYPE	P	AMPS	87.7 / 50.4	NEMA DESIGN	---	OHMS (BETWEEN LINES)	
PHASE	3	DUTY	CONT	ROTOR WK² (lb-ft²)	57	TYPICAL DATA	

EQUIVALENT CIRCUIT DATA

(Per Unit, Per Phase)

FULL LOAD				LOCKED ROTOR			
R_1	0.00681	X_1	0.09213	R_1	0.00576	X_1	0.09604
R_2	0.00581	X_2	0.08079	R_2	0.01793	X_2	0.03748
R_M	0.13536	X_M	3.65505	R_M	0.69306	X_M	2.89489
BASE OHMS		53.61900		BASE VOLTS		2309	
SC Time Constant		0.061 Sec		X" = X_S		0.13352	
OC Time Constant		1.706 Sec		X/R Ratio		16.34	

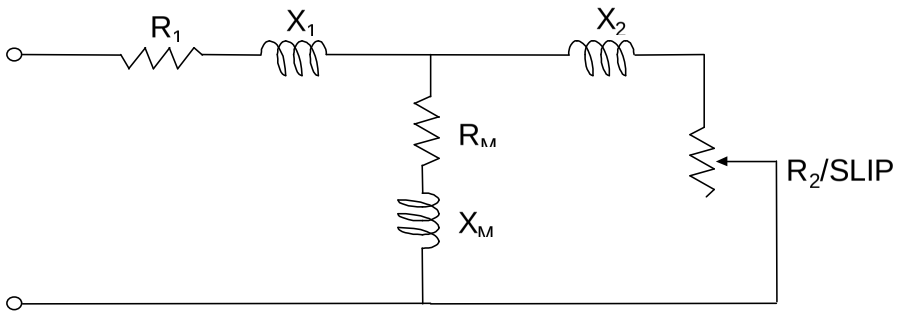

Parallel Equivalent			
FL R_M' pu	98.83062	LR R_M' pu	12.78493
FL X_M' pu	3.66006	LR X_M' pu	3.06081

R_1 = Stator dc resistance
R_2 = Rotor resistance
R_M = Core loss resistance
SC = Short circuit
OC = Open circuit
X_1 = Stator leakage reactance
X_2 = Rotor leakage reactance
X_M = Magnetizing reactance
FL = Full load
LR = Locked rotor

X" = X_S = Subtransient reactance

REVISION 0

BALDOR A MEMBER OF THE ABB GROUP	DR. BY C. Evans CK. BY J. LaVallee APP. BY B. LeRoy DATE 2/3/2014	A-C MOTOR PERFORMANCE CURVES	VGPM402E4K SH 5 OF 7 ISSUE DATE: 2/3/2014

BALDOR A MEMBER OF THE ABB GROUP

REL S.O.	A50WG4877-R001	HERTZ	60	AMB°C	40	CODE LETTER	G
FRAME	5010	RPM	3576	INSUL	F	ENCLOSURE	TEFC
HP	400	VOLTS	2300 / 4000	S.F.	1.15	STATOR RES.@25°C	0.19480 / 0.58440
TYPE	P	AMPS	87.7 / 50.4	NEMA DESIGN	---	OHMS (BETWEEN LINES)	
PHASE	3	DUTY	CONT	ROTOR WK^2 (lb-ft^2)	57	TYPICAL DATA	

Recommended Winding and Bearing Temperatures

Stator Winding	Class B	Class F
Maximum Running Total Temperature	130 °C	155 °C
Alarm Total Temperature	135 °C	160 °C
Trip Total Temperature	145 °C	170 °C

Sleeve Bearings - Oil Lubricated (40 °C Ambient)	Bearing	Oil
Typical Running Total Temperature	93 °C	60 °C
Alarm Total Temperature	96 °C	70 °C
Trip Total Temperature	98 °C	75 °C

Anti-Friction Bearings - Grease Lubricated (40 °C Ambient)	Bearing	Grease
Typical Running Total Temperature	90 °C	80 °C
Alarm Total Temperature	110 °C	100 °C
Trip Total Temperature	120 °C	110 °C

Recommended Vibration Settings for Standard Motors

Speed (rpm)	Shaft Vibration (mils)		Bracket Vibration (mils)	
	Alarm	Shutdown	Alarm	Shutdown
3600	2.50	3.00	1.00	1.50
1800	3.00	3.50	2.00	2.50
1200	3.00	3.50	2.00	2.50
900 & Lower	3.00	3.50	2.00	2.50
			Bracket Vibration (in/sec pk)	
			Alarm	Shutdown
All Speeds			0.20*	0.30*

* 0 to 1000 Hz Spectrum

REVISION 0

BALDOR A MEMBER OF THE ABB GROUP

DR. BY C. Evans
CK. BY J. LaVallee
APP. BY B. LeRoy
DATE 2/3/2014

A-C MOTOR PERFORMANCE CURVES

VGPM402E4K

SH 6 OF 7

ISSUE DATE: 2/3/2014

REL S.O.	A50WG4877-R001	HERTZ	60	AMB°C	40	CODE LETTER	G
FRAME	5010	RPM	3576	INSUL	F	ENCLOSURE	TEFC
HP	400	VOLTS	2300 / 4000	S.F.	1.15	STATOR RES.@25°C	0.19480 / 0.58440
TYPE	P	AMPS	87.7 / 50.4	NEMA DESIGN	---	OHMS (BETWEEN LINES)	
PHASE	3	DUTY	CONT	ROTOR WK^2 (lb-ft^2)	57	TYPICAL DATA	

A-C MOTOR
CONNECTION DIAGRAM

STANDARD 6 LEAD (DELTA / STAR { Y } CONNECTED)
DUAL VOLTAGE (LOW VOLTS / HIGH VOLTS)

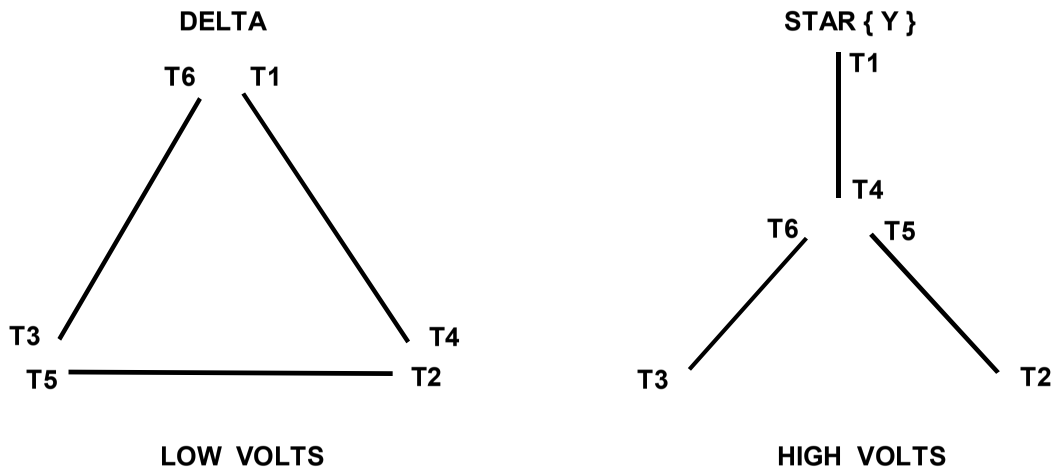

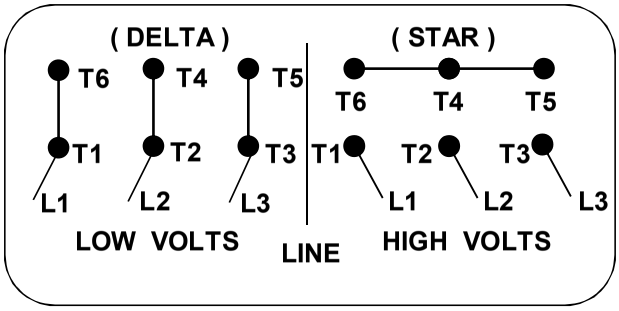

(N.P. 1767-CC)

REVISION 0

BALDOR A MEMBER OF THE ABB GROUP	DR. BY C. Evans CK. BY J. LaVallee APP. BY B. LeRoy DATE 2/3/2014	A-C MOTOR PERFORMANCE CURVES	VGPM402E4K SH 7 OF 7 ISSUE DATE: 2/3/2014

RESISTANCE TEMPERATURE CONNECTION DIAGRAM

WINDING

100 OHM @ 0°C

BEARING

N/A

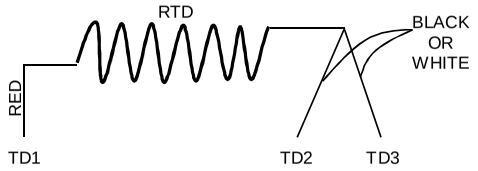

BALDOR · DODGE · RELIANCE	DR. BY Chris Stockton CK. BY Chris Stockton APP. BY Joe Hillhouse DATE 3/5/2014	A-C MOTOR AUXILARY CONNECTIONS	G30_GP SHEET 1 OF 2

SPACE HEATER CONNECTION

VOLTS 120/240 **AMPS** 2.9/1.46 **WATTS** 350/350

PHASE 1 **HZ.** 60

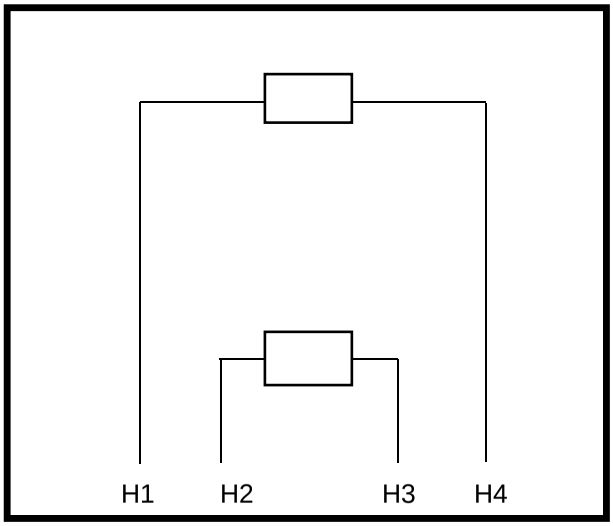

HEATER CONNECTIONS

LOW VOLTAGE - PARALLEL
L1 - H1 & H2
L2 - H3 & H4

HIGH VOLTAGE - SERIES
L1 - H1
L2 - H2
CONNECT H3 TO H4

BALDOR · DODGE · RELIANCE	DR. BY Chris Stockton CK. BY Chris Stockton APP. BY Joe Hillhouse DATE 3/5/2014	A-C MOTOR AUXILARY CONNECTIONS	G30_GP SHEET 2 OF 2

616159-806

GENERAL PURPOSE STOCK ALTERNATING CURRENT MOTORS

ENCLOSURE: TOTALLY ENCLOSED
MOUNTING: FOOT

SQUIRREL-CAGE INDUCTION
3600 RPM MAX
FRAME G5010S
(COUPLED DUTY)
INCLUDES G5009 FRAME MOUNTING HOLES

COOLING: FAN COOLED
ANTI-FRICTION BEARINGS
ENGLISH HARDWARE
OVERSIZE MAIN CONDUIT BOX

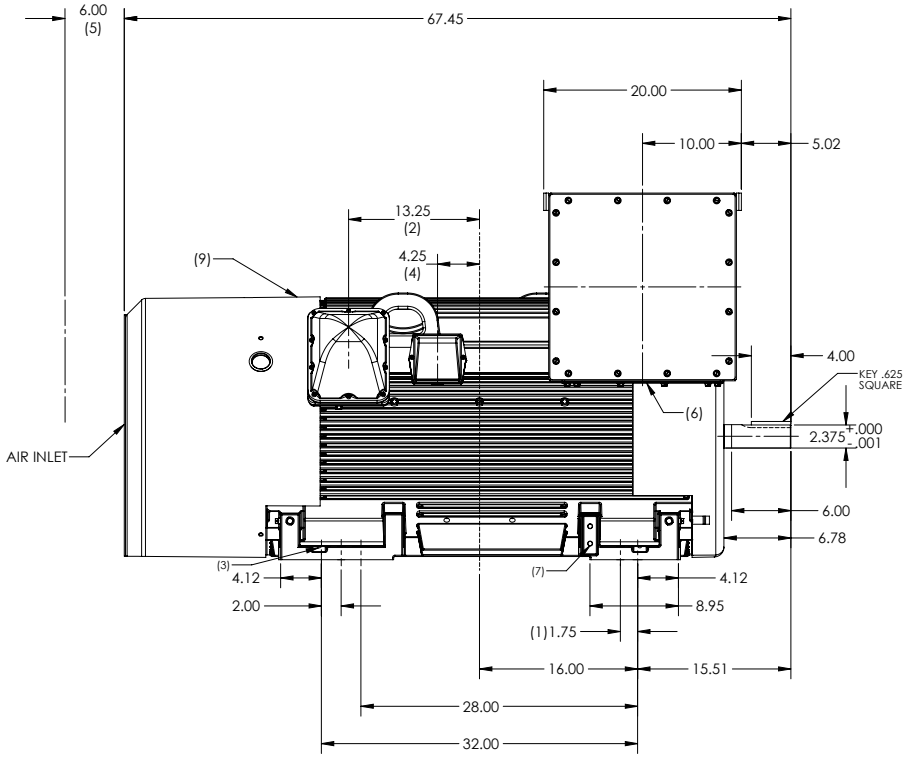

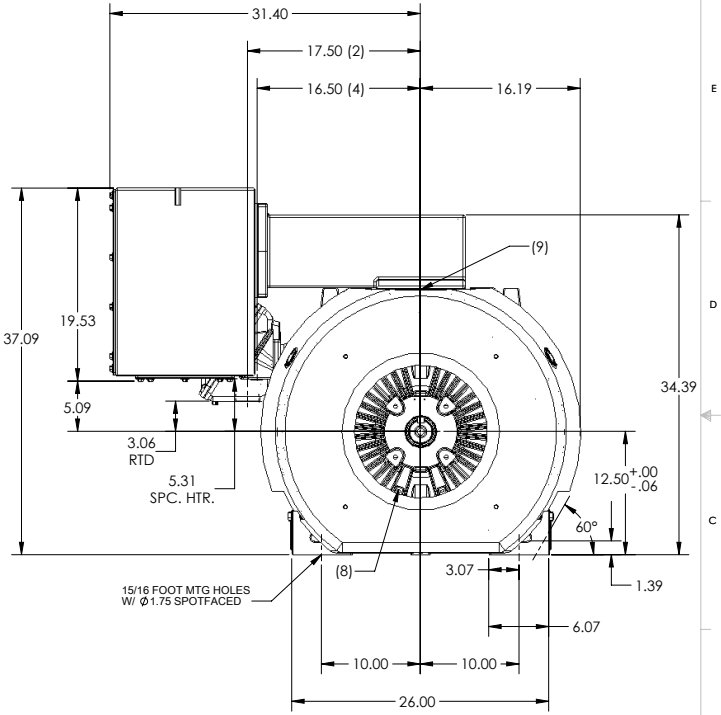

NOTES:

1. **(4) 3/4-10 JACKSCREW HOLES**
2. **2.0 NPT FOR WINDING TEMPERATURE DETECTOR LEADS**
3. **11/32 DOWEL PIN PILOT HOLES, 1 HOLE EACH FOOT**
4. **3/4 NPT FOR MOTOR SPACE HEATER LEADS**
5. **WALL OR OBSTRUCTION MUST NOT ENCROACH ON AIR INLET SPACE**
6. **CUSTOMER TO PROVIDE HOLE FOR MOTOR POWER LEADS**
7. **TWO GROUND PADS DIAGONALLY OPPOSITE EACH OTHER, TAPPED 1/2-13**
8. **1/8 NPT PROVISIONS FOR BEARING TEMPERATURE DETECTOR LEADS.**
9. **GREASE POINT**

CONDUIT BOX LOCATED ON OPPOSITE SIDE WHEN F-2.
IF MOUNTING CLEARANCE DETAILS ARE REQUIRED, CONSULT FACTORY.
MAXIMUM PERMISSIBLE SHAFT RUNOUT WHEN MEASURED AT END OF STANDARD SHAFT EXTENSION IS .003" T.I.R.

WEIGHT (LBS): 5500 (MAXIMUM)
DIMENSIONS ARE IN INCHES

CATALOG #'S

M50352S-2340
M50402S - 2340
M50452S - 2340
M50502S - 2340
EM504525-4
EM505025-4

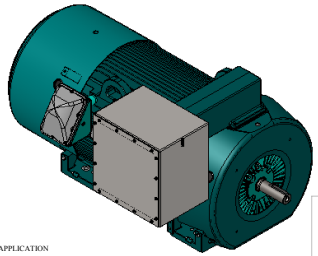

CUSTOMER IS RESPONSIBLE FOR DETERMINING THAT BALDOR'S PRODUCT WILL PERFORM SUITABLY IN THE INTENDED APPLICATION

REV. DESC: UPDATE BOX TO FROM 19X19X12 TO 19X19X14			
REV: F	VERSION: 06	REVISED: 11:38:33 09/16/2016	TDR: 000000997103
MODEL NO. 616159-806			REF:
BY: MGHMTT	Material:		C

BALDOR

G5010S,TEFC,S/N,CPLD,3600,A/F,F1,19X19X14,U=2.375,XBA=15.50

908-651919

908-651919

BALDOR
A MEMBER OF THE ABB GROUP

416820–004

A–C MOTOR CONNECTION DIAGRAM

STANDARD 6 LEAD (DELTA/STAR CONNECTED) DUAL VOLTAGE (LOW VOLTS/HIGH VOLTS)

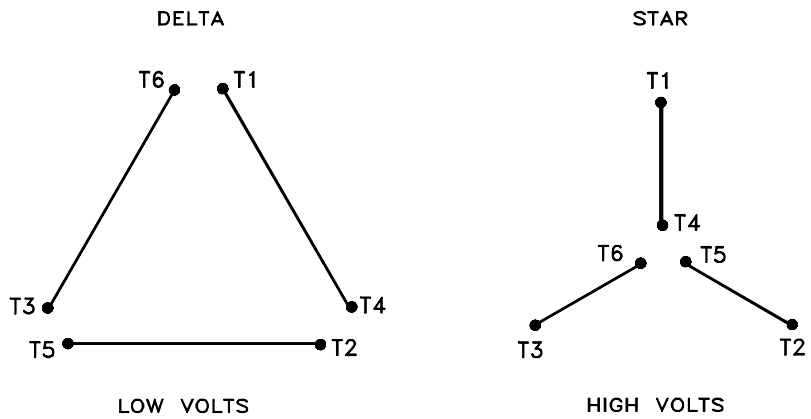

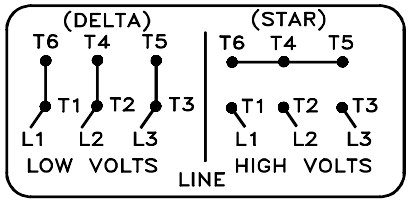

(N.P. 1767–CC)

416820–004

REV. DESC: ADDED CLASSIFICATONS			BALDOR
REV. LTR: B	VERSION: 02	TDR: 000000539297	
FILE: \RSN\00017\950		REVISED: 11:58:09 05/04/2010	A–C MOTOR CONNECTION DIAGRAM
MTL: –		BY: RAGRA	SH 1 of 1

BALDOR A MEMBER OF THE ABB GROUP